Ecoflam

SPARE PARTS EXPLODED VIEW
GAS-WALL BOILER ATM. BURNER

Model

LINDA TANK

R8202805-04 - 26/06/2013

EN	FR	IT	ES	DE

LINDA TANK

Gas-wall boiler atm. burner

Col	Reference	Model type	Begin	End
1	3670000	LINDA TANK 24 NAT	07-2004	10-2008
1	3670001	LINDA TANK 24 GPL	07-2004	05-2007
2	3670002	LINDA TANK 30 NAT	07-2004	05-2007
2	3670003	LINDA TANK 30 GPL	07-2004	06-2007

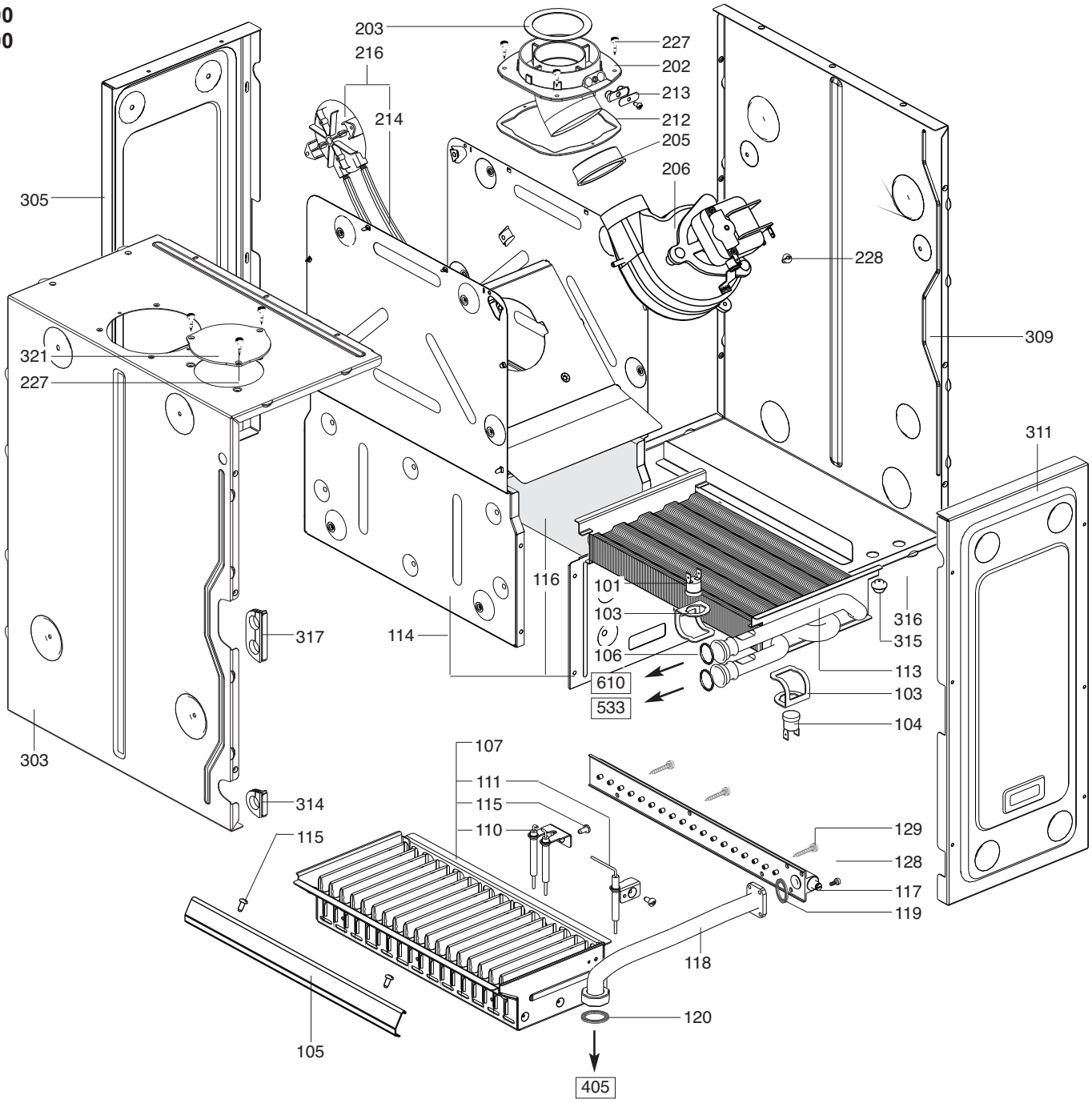
203
216
214
227
202
213
212
205
206
305
228
309
321
227
311
116
101
103
106
610
533
316
315
113
103
104
317
114
303
107
111
115
110
314
115
129
128
117
119
118
120
105
405

	Description	Manf. Pt. N	Type	LINDA TANK 24	LINDA TANK 30	3	4	5	6	7	8	9	10	11	12	13	14	15	16	17	18		31
0100	**BURNER ASSEMBLY**																						
0101	OVERHEAT THERMOSTAT 100C	61010572		●	●																		
0103	CLIP	61010050		●	●																		
0104	THERMISTOR TEMP. SENSOR KIT	61317663		●	●																		
0105	CROSS LIGHTING STRIP	61303352		●	●																		
0106	O-RING D: 17-4	60024164-51		●	●																		
0107	BURNER BASE & ELECTRODES	61306958		●	●																		
0110	ELETTRODO D ACCENSIONE	61305840		●	●																		
0111	IONIZATION ELECTRODE	61303302		●	●																		
0113	HEAT EXCHANGER	61306547		●	●																		
0114	COMBUSTION CHAMBER	61306551		●																			
	COMBUSTION CHAMBER	61306959			●																		
0115	TAPPING SCREW CBLSX D: 4.2-9.5	61010125		●	●																		
0116	COMBUSTION CHAMBER LINING KIT	61307039		●	●																		
0117	MANIFOLD 18 INJ:0.68	61305248	GPL	●																			
	MANIFOLD 18 INJ:0.74 - DIA:9.0	61306960	GPL		●																		
	MANIFOLD 18 INJ:1.23	61305249	MET	●																			
	MANIFOLD 18 INJ:1.23 - DIA:9.0	61306949	MET		●																		
0118	GAS TUBE	61303140		●	●																		
0119	GASKET (/Manifold)	61010071		●	●																		
0120	SHEET GASKET D: 24-18.2-1.5	60022835-01		●	●																		
0128	SCREW CX M 5-12	61011224		●	●																		
0129	TAPPING SCREW CBLSX D: 4.2-25	61010128		●	●																		
0200	**FAN ASSEMBLY**																						
0202	FLUE CONNECTION	61313154		●	●																		
0203	RESTRICTORS PACK	61316976		●																			
	RESTRICTORS PACK	61316977			●																		
0205	GASKET	61303825		●	●																		
0206	FAN ASSY	61311926		●	●																		
0212	GASKET	61300262		●	●																		
0213	PLUG KIT	61306698		●	●																		
0214	SILICONE TUBE D: 9x3 L: 1.30M	60081265		●	●																		
0216	AIR PRESSURE SWITCH 20 Pa	61307664-01		●																			
	AIR PRESSURE SWITCH 50 Pa	61307665-01			●																		
0227	TAPPING SCREW CBLSX D:4.2-12.5	61010847		●	●																		
0228	TAPPING SCREW CBLSX D: 6.3-19	61010127		●	●																		
0300	**SEALED CASE**																						
0303	SIDE PANEL	61311923		●	●																		
0305	REAR PANEL	61304377		●	●																		
0309	SIDE PANEL	61306623		●	●																		
0311	FRONT PANEL	61304376		●	●																		
0314	GROMMET D: 18	61303149		●	●																		
0315	GROMMET	60039017		●	●																		
0316	GROMMET - DOUBLE	60042707		●	●																		
0317	GROMMET	61303148		●	●																		
0321	AIR RETURN COVER	990350		●	●																		

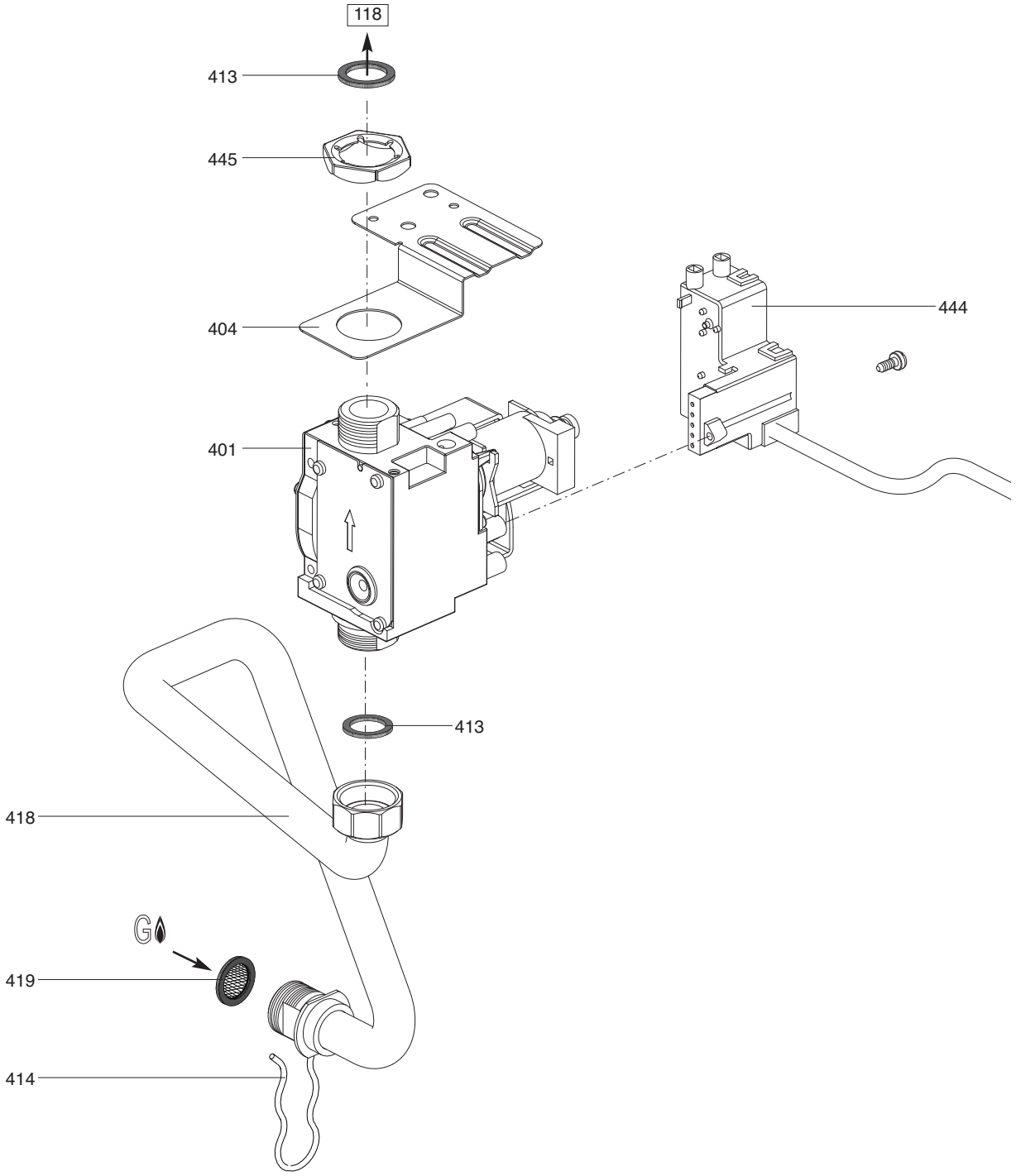
118
413
445
404
401
444
413
418
G
419
414

	Description	Manf. Pt. N	Type	LINDA TANK 24	LINDA TANK 30	3	4	5	6	7	8	9	10	11	12	13	14	15	16	17	18	31	
0400	**GAS SECTION**																						
0401	GAS VALVE	61314591		●	●																		
0404	SUPPORT BRACKET	61311036		●	●																		
0413	SHEET GASKET D: 24-18.2-1.5	60022835-01		●	●																		
0414	PIN	61305179		●	●																		
0418	GAS TUBE	61311126		●	●																		
0419	GAS FILTER	60037309		●	●																		
0443	GASKET (SPARK GENERATOR)	574279		●	●																		
0444	IGNITER	61311269		●	●																		

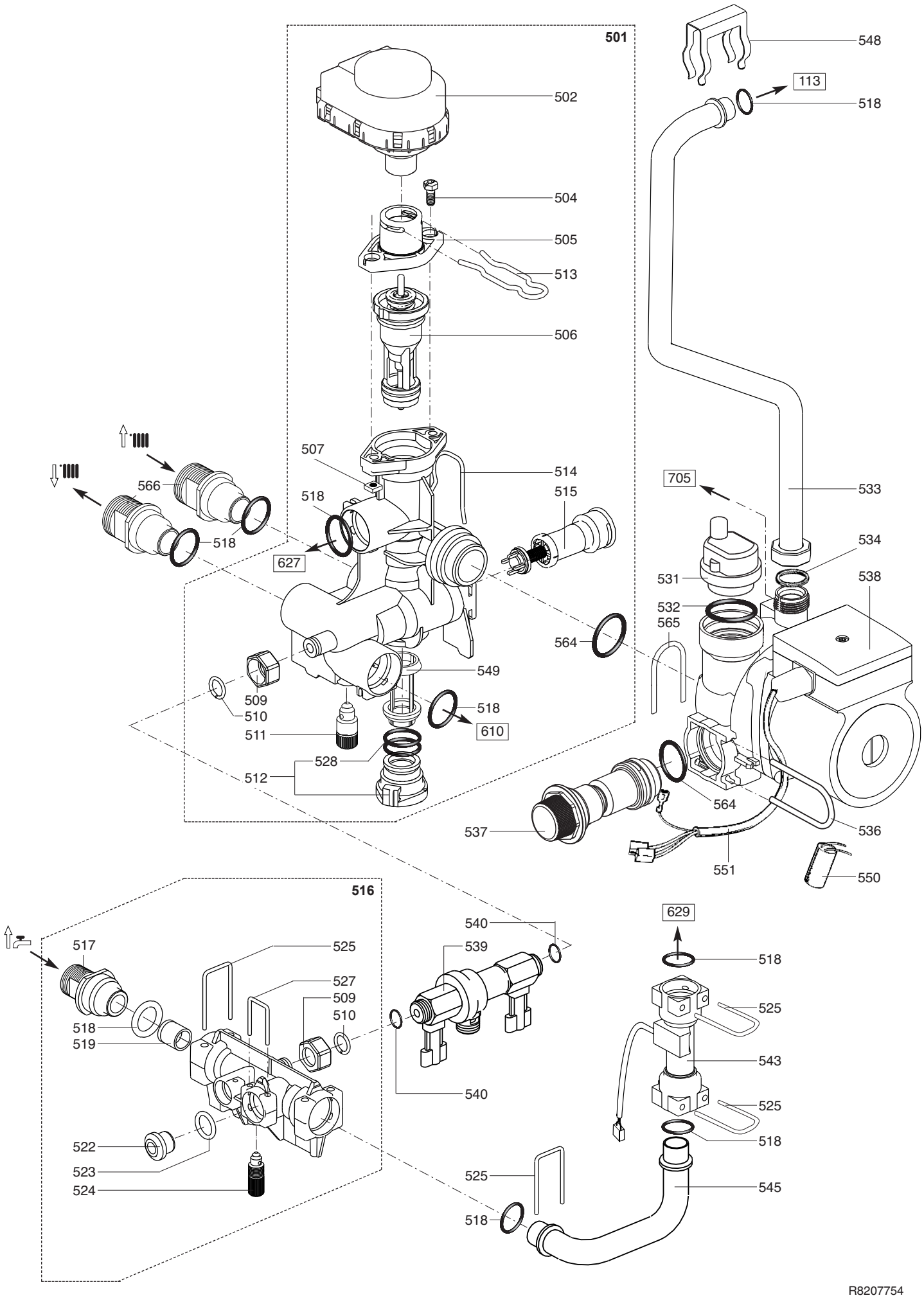
501
502
504
505
513
506
507
514
515
518
627
566
518
509
510
511
528
512
549
518
610
564
548
113
518
705
533
534
538
531
532
565
564
537
536
551
550
516
517
525
527
509
510
518
519
522
523
524
540
539
540
629
518
525
543
525
518
525
518
545
R8207754

	Description	Manf. Pt. N	Type	LINDA TANK 24	LINDA TANK 30	3	4	5	6	7	8	9	10	11	12	13	14	15	16	17	18		31
0500	**HYDRAULIC BLOCK**																						
0501	HEATING BLOCK ASSY	61306595		●	●																		
0502	MOTOR - THREE-WAY VALVE	61302483-01		●	●																		
0504	SCREW HX M 5-12	61010131		●	●																		
0505	INTERFACE	61304003		●	●																		
0506	VALVE KIT	61303330		●	●																		
0507	NUT M 5	61016604		●	●																		
0509	NUT 3/8” THICK: 11	60020746-20		●	●																		
0510	RETAINING RING	61302621		●	●																		
0511	DRAIN SCREW ASSY	60081028		●	●																		
0512	PLUG ASSY	61305112		●	●																		
0513	PIN	61304002		●	●																		
0514	PIN	61302332		●	●																		
0515	BY-PASS	61305111		●	●																		
0516	WATER/WATER HEAT BLOCK ASSY	61315355		●	●																		
0517	CONNECTION	61302753		●	●																		
0518	O-RING D: 17-4	60024164-51		●	●																		
0519	FLOW REGULATOR 12L A/R	61303380		●	●																		
0522	PLUG	61303675		●	●																		
0523	O-RING D: 13.6-2.7	60021061-18		●	●																		
0524	DRAIN SCREW ASSY	60081904		●	●																		
0525	PIN	61016206-02		●	●																		
0527	PIN	61303234		●	●																		
0528	O-RING D: 22-2	60022113-03		●	●																		
0531	AIR SEPARATOR HEAD ASSEMBLY	61304608		●	●																		
0532	GASKET KIT	61304618		●	●																		
0533	TUBE : PUMP TO HEAT EXCHANGER	61303219		●	●																		
0534	O-RING D: 16-1.9	61009833-37		●	●																		
0536	CLIP	61302720		●	●																		
0537	PRESSURE RELIEF VALVE	61305113		●	●																		
0538	PUMP + AIR SEPARATOR 15/50	61301964		●	●																		
	PUMP + AIR SEPARATOR 15/60	61303461		●	●																		
0539	DISCONNECTOR	61303319		●	●																		
0540	SHEET TASKET D: 15-8.5-1.5	60030867		●	●																		
0543	STOPPED WATER THROTTLE	61304982		●	●																		
0545	COLD WATER TUBE	61311240		●	●																		
0548	CLIP	61010609		●	●																		
0549	HEATING FILTER	61016502		●	●																		
0550	CAPACITOR	61000652-10		●	●																		
0551	PUMP LEAD (2 SPEEDS)	61306995		●	●																		
0564	O-RING D: 24.6-3.6	61009834-30		●	●																		
0565	CLIP	60030898-03		●	●																		
0566	CONNECTION	61303920		●	●																		

600

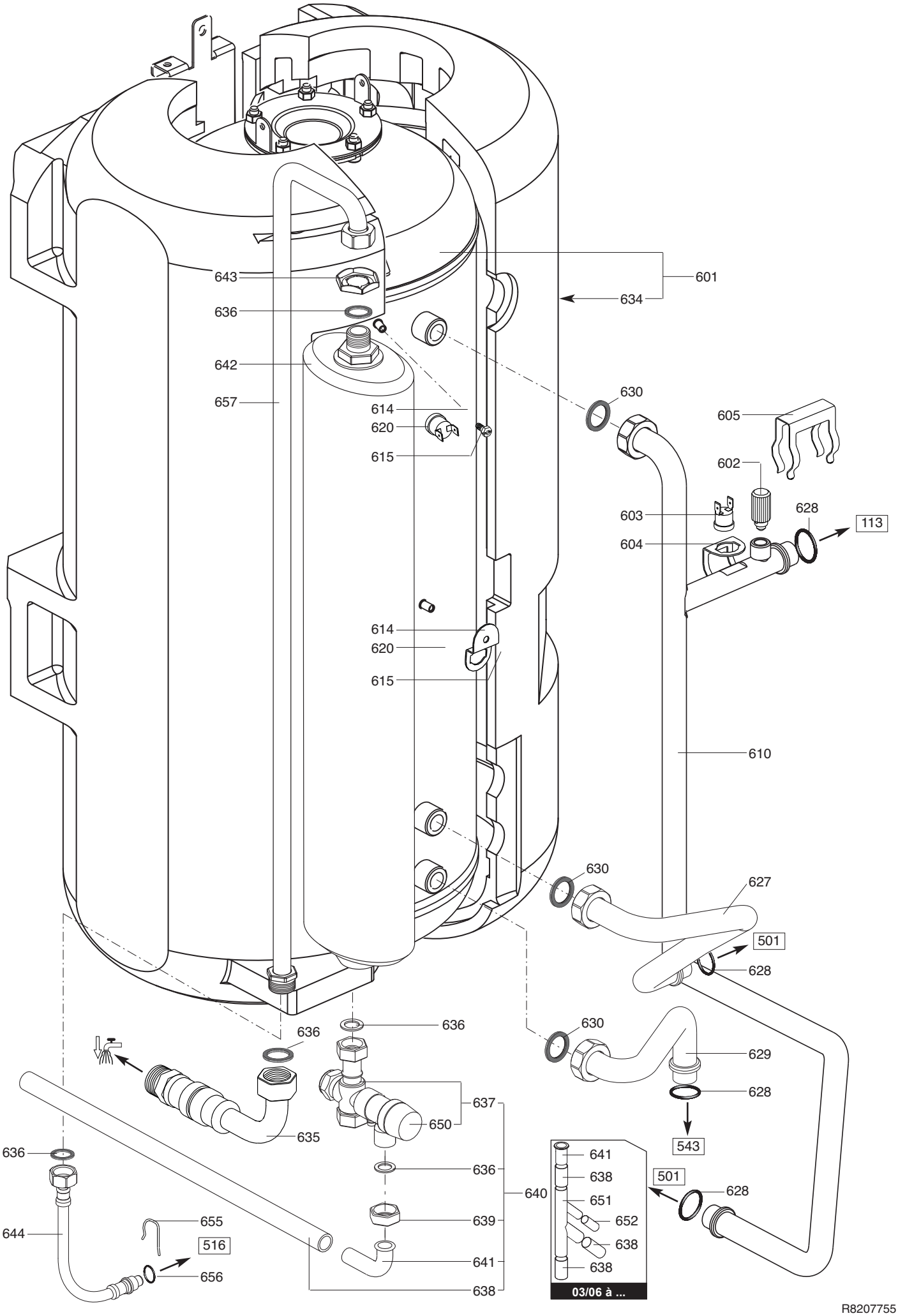

R8207755

	Description	Manf. Pt. N	Type	LINDA TANK 24	LINDA TANK 30	3	4	5	6	7	8	9	10	11	12	13	14	15	16	17	18	31	
0600	**HOT WATER TANK**																						
0601	FLANGE + ANODE	60000334		●	●																		
	GASKET	61317346		●	●																		
	HOT WATER TANK 60L	61309770		●	●																		
0602	DRAIN SCREW ASSY	60081028		●	●																		
0603	THERMISTOR TEMP. SENSOR KIT	61317663		●	●																		
0604	CLIP	61010050		●	●																		
0605	CLIP	61010609		●	●																		
0610	HEATING FLOW BEND	61309674		●	●																		
0614	SUPPORT	61303369		●	●																		
0615	SCREW HSX M 5-8	61302631		●	●																		
0620	THERMISTOR	61314258		●	●																		
0627	FLOW TUBE	61309670		●	●																		
0628	O-RING D: 17-4	60024164-51		●	●																		
0629	COLD WATER TUBE	61309671		●	●																		
0630	SHEET GASKET D: 24-18.2-1.5	60061855-01		●	●																		
0634	INSULATION	61310027		●	●																		
0635	HOT WATER BEND	61305099		●	●																		
0636	WASHER D: 18.4-12.2-1.5	60061855-14		●	●																		
0637	PRESSURE RELIEF VALVE 7 BARS	61304749		●	●																		
0638	TUBE PVC D: 13x17 L: 1M	60081266-02		●	●																		
0639	NUT 1/2” THICK: 12	60020747-28		●	●																		
0640	PRESSURE RELIEF VALVE KIT	61305178		●	●																		
0641	CONNECTING PIPE	60001076		●	●																	03/06	
	CONNECTING PIPE	61010430		●	●																		02/06
0642	EXPANSION VESSEL	61306776		●	●																		
0643	CONTRODADO H 1/2	60031139		●	●																		
0644	FLEXIBLE PIPE	61314084		●	●																		
0650	VALVE 7 BARS	60000437		●	●																		
0651	CONNECTION	60000368		●	●																		
0652	TUBE PVC D: 9x12 L: 1M	60081266		●	●																		
0655	CLIP	61010005		●	●																		
0656	O-RING D: 8.9-2.7	61009834-14		●	●																		
0657	EXPANSION VESSEL TUBE	61315789		●	●																		

701
702
735
703
704
705
718
711
721
714
739

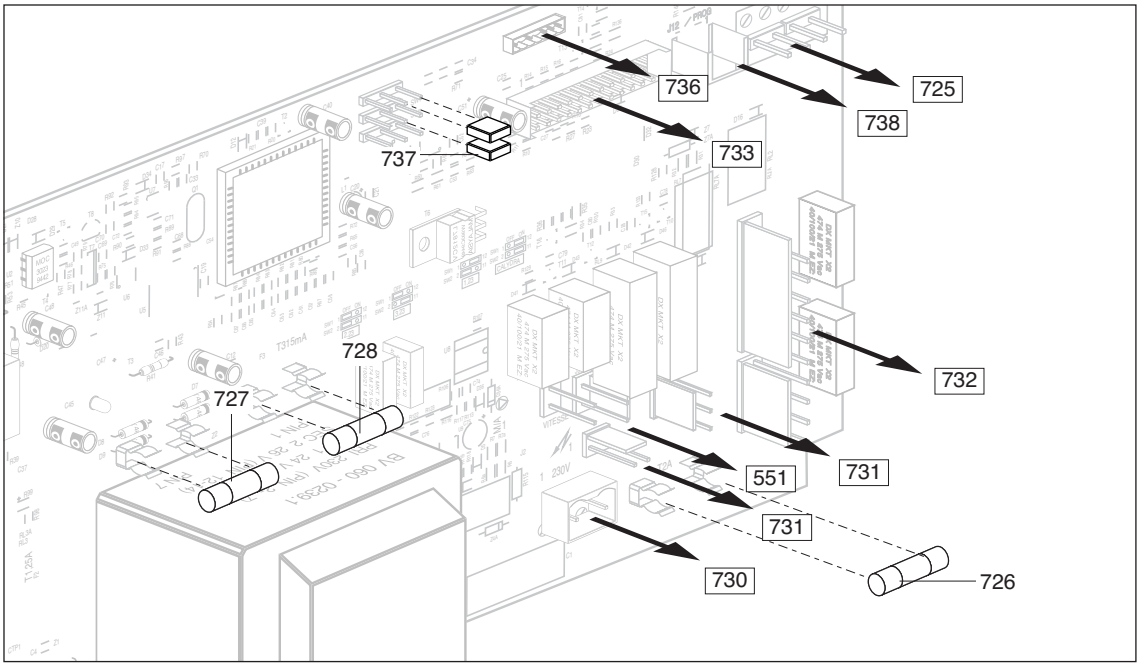

R8207756

	Description	Manf. Pt. N	Type	LINDA TANK 24	LINDA TANK 30	3	4	5	6	7	8	9	10	11	12	13	14	15	16	17	18	31	
0700	**ELECTRICAL BOX**																						
0701	BASE - BOX	61303242		●	●																		
0702	CONNECTION STRIP	61002725		●	●																		
0703	O RING D: 5.7-1.9	61009834-10		●	●																		
0704	CLIP	61002406		●	●																		
0705	PRESSURE GAUGE	61305005		●	●																		
0711	ELECTRICAL BOX COVER	61313201		●	●																		
0714	CONTROL KNOB	992027		●	●																		
0718	TAPPING SCREW TCBL D:4 L:10	61020509		●	●																		
0721	PRINTED CIRCUIT BOARDS	61316920		●	●																		
0725	THERMOSTAT CABLE	61312402		●	●																		
0726	FUSE 250V 2A - TEMPORIZED	61003456		●	●																		
0727	FUSE 250V 1.25A - TEMPORIZED	61003635		●	●																		
0728	FUSE 250V 0.315A - TEMPORIZED	61307845		●	●																		
0730	CABLAGGIO D ALIMENTAZIONE	61311903		●	●																		
0732	CABLE	61310952		●	●																		
0733	WIRE ASSEMBLY	61310949		●	●																		
0734	EARTH WIRE	61305498		●	●																		
0735	EARTH WIRE	61303360		●	●																		
0736	INTERCONNECTION CABLE	61312117		●	●																		
0737	BLACK SHUNT	61400030		●	●																		
0738	CONTACT SOCKET CONNECTOR 3 P.	61003209		●	●																		
0739	ECRAN AUTOCOLLANT BALIXIA	992026		●	●																		

800

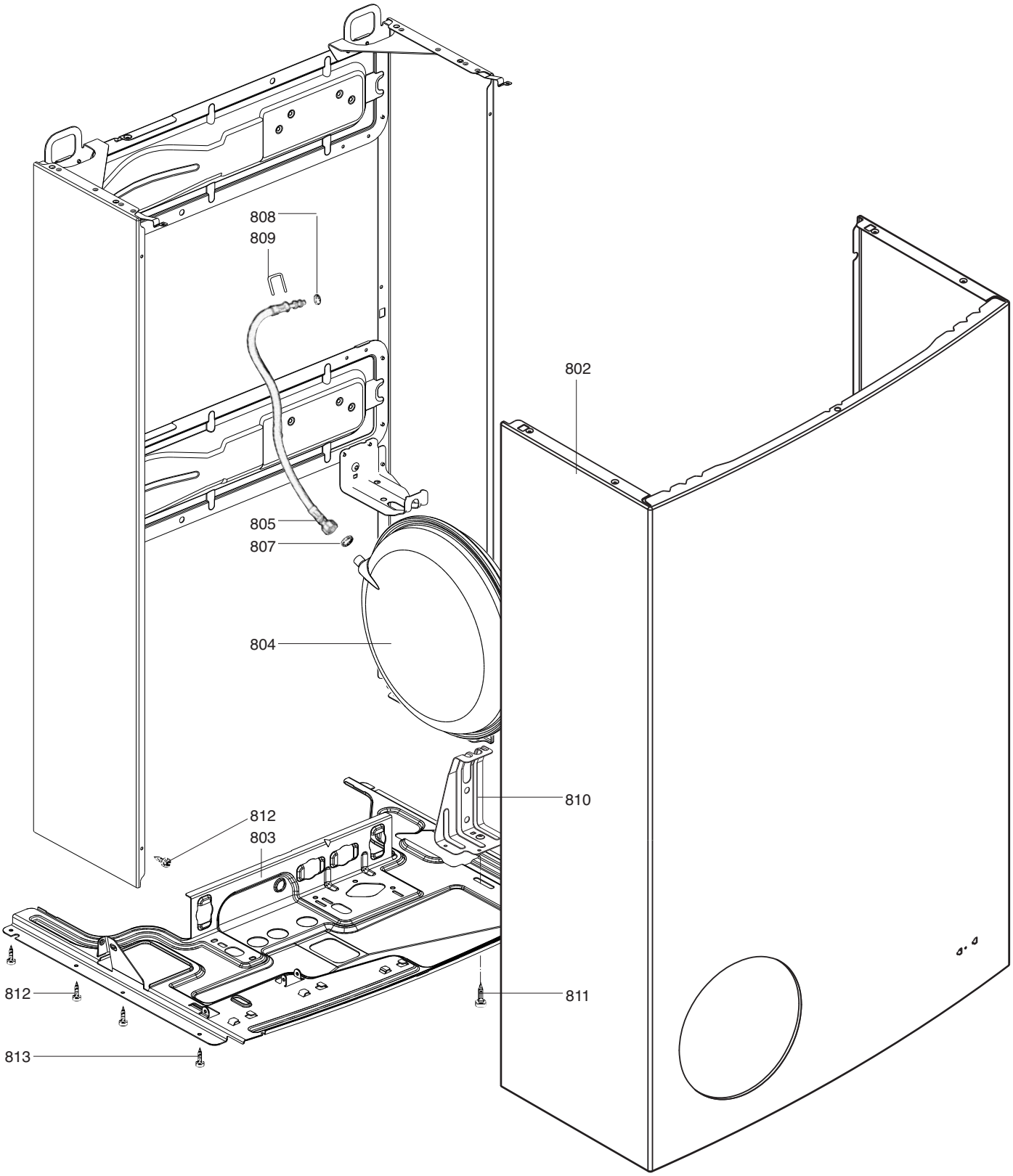

	Description	Manf. Pt. N	Type	LINDA TANK 24	LINDA TANK 30	3	4	5	6	7	8	9	10	11	12	13	14	15	16	17	18		31
				1	2																		
0800	**CHASSIS-FRONT CASE**																						
0802	CASING	61311081		●	●																		
0803	PROTECTING PLATE	61303185		●	●																		
0804	EXPANSION VESSEL	60056676-06		●	●																		
0805	FLEXIBLE PIPE KIT	61306594		●	●																		
0807	SHEET GASKET D: 12-6-2	61308868		●	●																		
0808	O-RING D: 8.9-2.7	61009834-14		●	●																		
0809	CLIP	61010005		●	●																		
0810	SUPPORT BRACKET	61305617		●	●																		
0811	TAPPING SCREW CBLSX D: 6.3-13	61010648		●	●																		
0812	TAPPING SCREW CBLSX D:4.2-12.5	61010847		●	●																		
0813	TAPPING SCREW CBLSX D: 4.2-9.5	61010125		●	●																		

900

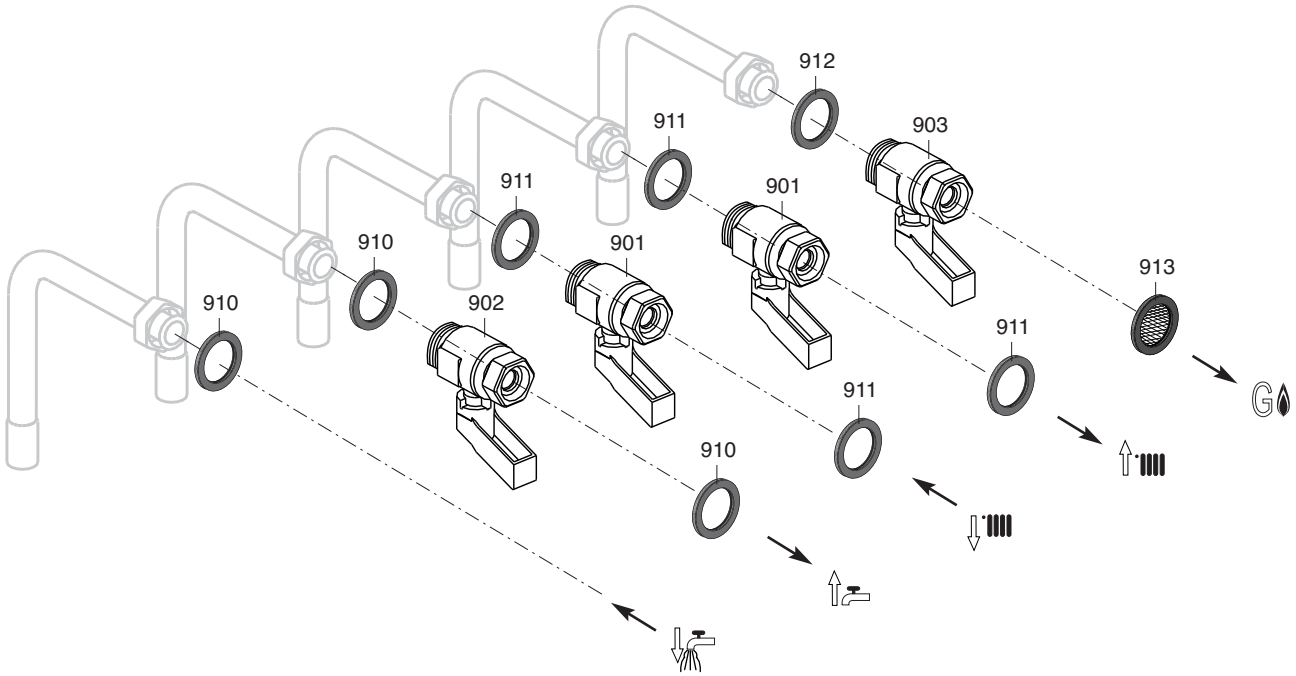
912
903
911
901
911
910
901
913
910
902
911
911
910
G

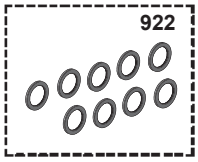
922

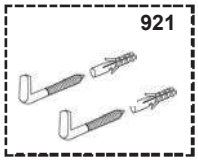
921

5000

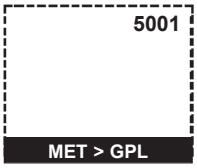
5001
MET > GPL

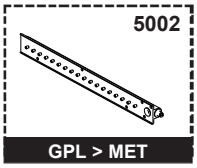
5002
GPL > MET

	Description	Manf. Pt. N	Type	LINDA TANK 24	LINDA TANK 30	3	4	5	6	7	8	9	10	11	12	13	14	15	16	17	18	31	
0900	**JIG PLATE & PIPE FITTING**																						
0901	WATER FLOW & RETURN SERVI. TAP	61303031		●	●																		
0902	WATER TAP	61303034		●	●																		
0903	GAS SERVICE TAP	61303032		●	●																		
0910	WASHER D: 18.4-12.2-1.5	60061855-14		●	●																		
0911	SHEET GASKET D: 24-17-1.5	60061855-19		●	●																		
0912	SHEET GASKET D: 24-18.2-1.5	60022835-01		●	●																		
0913	GAS FILTER	60037309		●	●																		
0921	FIXING KIT	61303711		●	●																		
0922	GASKETS SET	61305175		●	●																		
5000	**ACCESSORIES**																						
5001	CONVERSION KIT NAT > LPG	61313831		●																			
	CONVERSION KIT NAT > LPG	61313837			●																		
5002	CONVERSION KIT LPG > NAT	61316452		●																			
	CONVERSION KIT LPG > NAT	61316454			●																		

LIST OF THE ABBREVIATIONS

HW	:	Hot water.
CW	:	Cold water.
C	:	Ceramic resistance (normal heating).
Ca	:	Ceramic resistance (accelerated heating)
TP	:	Immersion heater.
1F	:	With fittings.
2F	:	Without fittings.
3F	:	With fittings and another outlet connection.
AMI	:	With mixing valve.
SMI	:	Without mixing valve.
PUISS	:	Power of th appliance.
PN	:	Appliance with normal pression.
LP	:	Appliance with low pression.
PV	:	Appliance with variable power.
PF	:	Appliance with fixed power.

IDENTIFICATION PLATE

SERIAL NUMBER

10 Characters : 04 05 125 011

- 011 → Sequencial number
- 125 → Manufacturing day
- 05 → Year of manufacture

11 Characters : 1 95 065004 - 31

- 1 → Month of manucfacture : from 1 to 9 → Jan. to Sep., O → Oct., N → Nov., D → Dec.
- 31 → Technical number of the appliance
- 065004 → Sequencial number
- 95 → Year of manufacture

19 Characters : 08 05 0013199 900640031

- 08 → Year of manufacture
- 05 → Month of manucfacture
- 900640031 → Product reference
- 0013199 → Sequencial number

20 Characters : 3675007 XX 2 07 070 00315

- 3675007 → Product reference
- 2 → Millenium of manufacture
- 00315 → Sequencial number
- 070 → Manufacturing day
- 07 → Year of manufacture

21 Characters : 3675007 XX 07 070 0000315

- 3675007 → Product reference
- 07 → Year of manufacture
- 0000315 → Sequencial number
- 070 → Manufacturing day

The indications mentionned on the prices, commercial or technical literature and the scheme are written for your guidance and are available at a given time. The CONSTRUCTOR retains the power to modify the presentation, the form, the size, the conception or the material of the products.